VIVA NXT P9399PW0201

WALL HUNG WATER CLOSET

JOHNSON

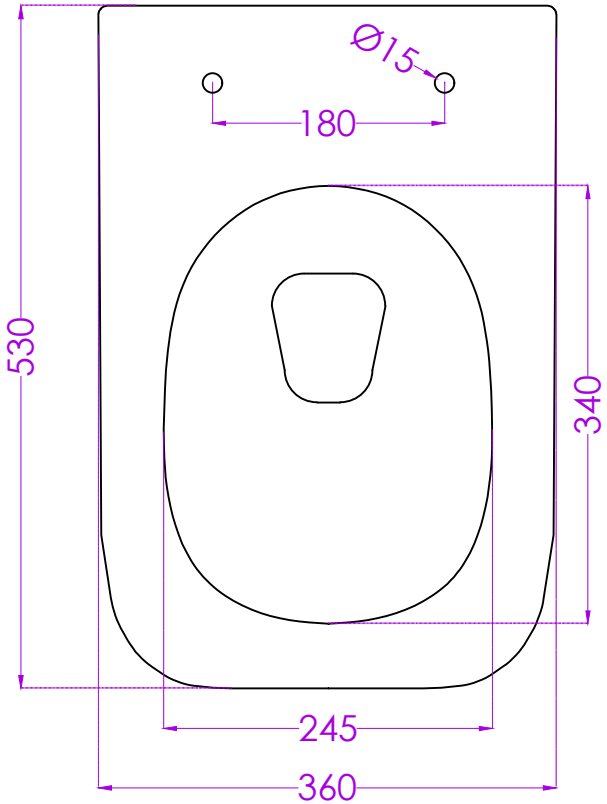

PLAN

SIDE

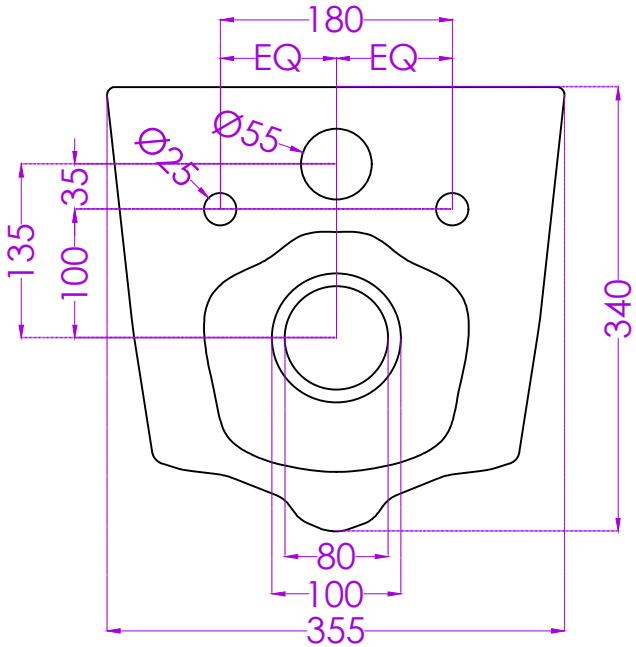

BACK